REDUCCIÓN MF CONICA A4

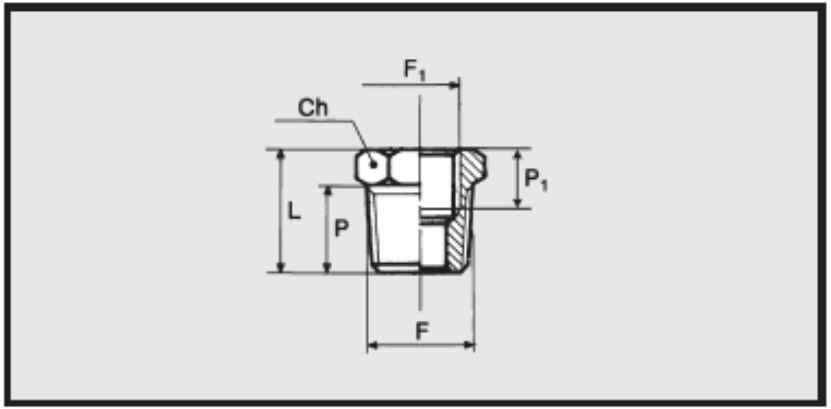

Cód.	Ref.	F	F1	Ch	P	P1	L
2104001	A4	1/4	1/8	14	11.0	7.0	16.0
2104002	A4	3/8	1/8	17	11.5	7.0	17.0
2104003	A4	3/8	1/4	17	11.5	8.0	17.0
2104004	A4	1/2	1/4	22	14.0	8.0	20.0
2104005	A4	1/2	3/8	22	14.0	10.0	20.0
2104006	A4	3/4	1/2	27	16.5	11.0	23.5